Current part is item (10) on diagram. Available at www.oshkoshequipment.com



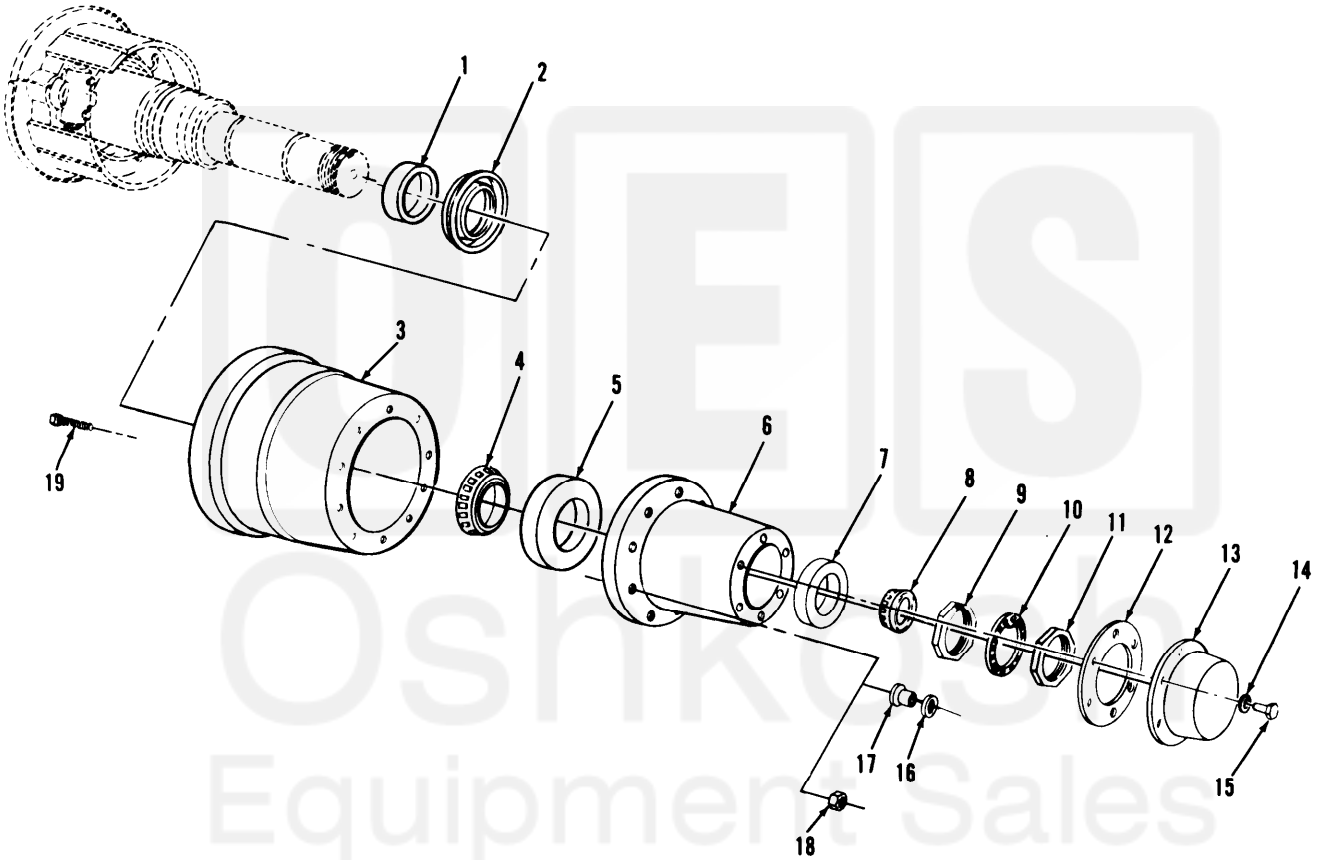


FIGURE 49. HUB AND DRUM INSTALLATION.

Current part is item (10) on diagram. Available at www.oshkoshequipment.com

Current part is item (10) on diagram. Available at www.oshkoshequipment.com



| (1) ITEM NO | (2) SMR CODE | (3) CAGEC | (4) PART NUMBER | (5) DESCRIPTION AND USABLE ON CODES (UOC) | (6) QTY |
|---|---|---|---|---|---|
| | | | | GROUP 1311 WHEEL ASSEMBLY | |
| | | | | FIG. 49 HUB AND DRUM INSTALLATION | |
| 1 | PAOZZ | 78500 | 1199M2509 | WIPER,OIL SEAL LEFT HALF AND RIGHT HALF, AXLES 5, 6, 7 AND 8 | 8 |
| 2 | PAOZZ | 02397 | A1205T774 | SEAL,PLAIN,ENCASED HUB AND DRUM | 8 |
| 3 | PAOZZ | 78500 | 3219H3908 | DRUM, BRAKE USED ON VEHICLE SERIAL NUMBER 201 AND SUBSEQUENT | 8 |
| 3 | PAOZZ | 78500 | 3219M3237X | BRAKE DRUM LEFT HALF AND RIGHT HALF AXLES 5, 6, 7 AND 8, USED ON VEHICLE SERIAL NUMBER 1 THROUGH 200 | 8 |
| 4 | PAOZZ | 60086 | 786 | BEARING, TAPERED HUB AND DRUM | 8 |
| 5 | PAOZZ | 00447 | 620631 | CUP, TAPERED ROLLER LEFT HALF AND RIGHT HALF AXLES 5, 6, 7, AND 8 | 8 |
| 6 | PAOZZ | 78500 | 333K1805X | HUB,BODY TRAILER AXLES 5,6,7 & 8, USED ON VEHICLE SERIAL NUMBER1 THROUGH 200 | 8 |
| 6 | PBOZZ | 78500 | A333M2275 | HUB BODY USED ON VEHICLE SERIAL NUMBER 201 AND SUBSEQUENT | 8 |
| 7 | PAOZZ | 78500 | HM617010 | CAP, BEARING, OUTER | 8 |
| 8 | PAOZZ | 09136 | HM617049 | CONE AND ROLLERS, LEFT HALF AND RIGHT HALF AXLES 5, 6, 7 AND 8 | 8 |
| 9 | PAOZZ | 19207 | 7979309-1 | NUT,PLAIN,OCTAGON HUB AND DRUM | 8 |
| 10 | POAZZ | 19207 | 5139123 | WASHER,LOCK AXLE NUT | 8 |
| 11 | PAOZZ | 19207 | 7346885 | NUT,PLAIN,OCTAGON LEFT HALF AND RIGHT HALF AXLES 5, 6, 7 AND 8 | 8 |
| 12 | PAOZZ | 78500 | 2208S773 | GASKET PART OF KIT P/N 5704977 | 8 |
| 13 | PAOZZ | 19207 | 8710725 | CAP, HUB TRAILER AXLES 5, 6, 7 AND 8 | 8 |
| 14 | PAOZZ | 96906 | MS35338-45 | WASHER, LOCK | 48 |
| 15 | PAOZZ | 78500 | S255C | SCREW,CAP LEFT HALF AND RIGHT HALF AXLES 5, 6, 7 AND 8 | 48 |
| 16 | PAOZZ | 78500 | 1199M117 | NUT, SINGLE BALL HEX, LEFT AND THREAD, USED ON SERIAL NUMBER 1 THROUGH 200 | 40 |
| 16 | PAOZZ | 78500 | 1199N118 | NUT, SINGLE BALL SEAT, HEX, RIGHT HAND THREAD, USED ON SERIAL NUMBER 1 THROUGH 200 | 40 |
| 17 | PAOZZ | 78500 | 1199J114 | NUT CAP ASSEMBLY LEFT HAND DUAL WHEEL MOUNTING, RIGHT HAND THREAD, USEDON VEHICLE SERIAL NUMBER 1 THROUGH 200 | 40 |
| 17 | PAOZZ | 78500 | 1199K115 | NUT, CAP, HEX LEFT HAND THREAD, USED ON VEHICLE SERIAL NUMBER 1 THROUGH 200 | 40 |
| 18 | PAOZZ | 19207 | 12274570 | NUT,SELF-LOCKING, CO LOCKING,HUB AND DRUM,USED ON VEHICLE SERIAL NUMBER 201AND SUBSEQUENT PART OF KIT P/N 5704977 | 80 |
| 19 | PAOZZ | 19207 | 8763020-1 | BOLT,RIBBED SHOULDE HUB AN DRUM ASSEMBLY,USED ON VEHICLE SERIAL | 80 |



Current part is item (10) on diagram. Available at www.oshkoshequipment.com